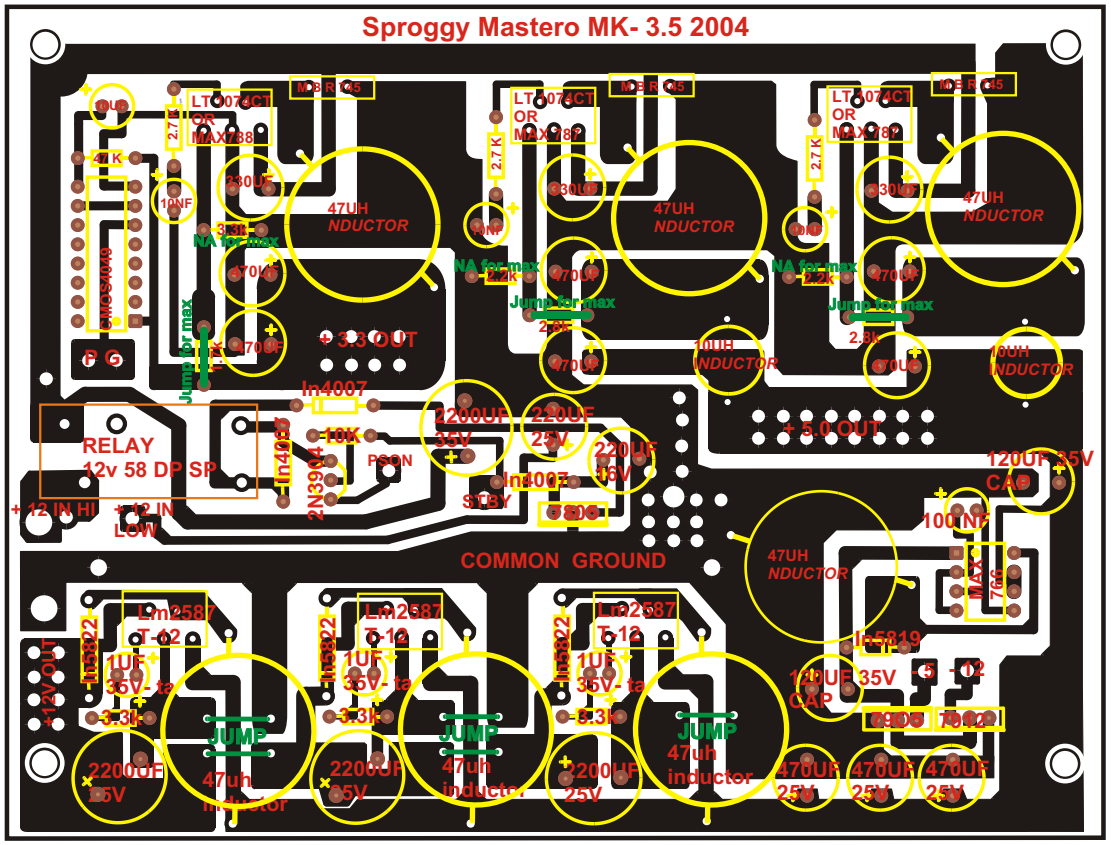
Sproggy Mastero MK- 3.5 2004
LT1074CT OR MAX788
47UH NDUCTOR
+ 3.3 OUT
In4007
RELAY 12v 58 DP SP
+ 12 IN HI
+ 12 IN LOW
COMMON GROUND
+ 5.0 OUT
120UF 35V CAP
100NF
Lm2587 T-12
JUMP 47uh inductor
2200UF 25V
470UF 25V
+12V OUT